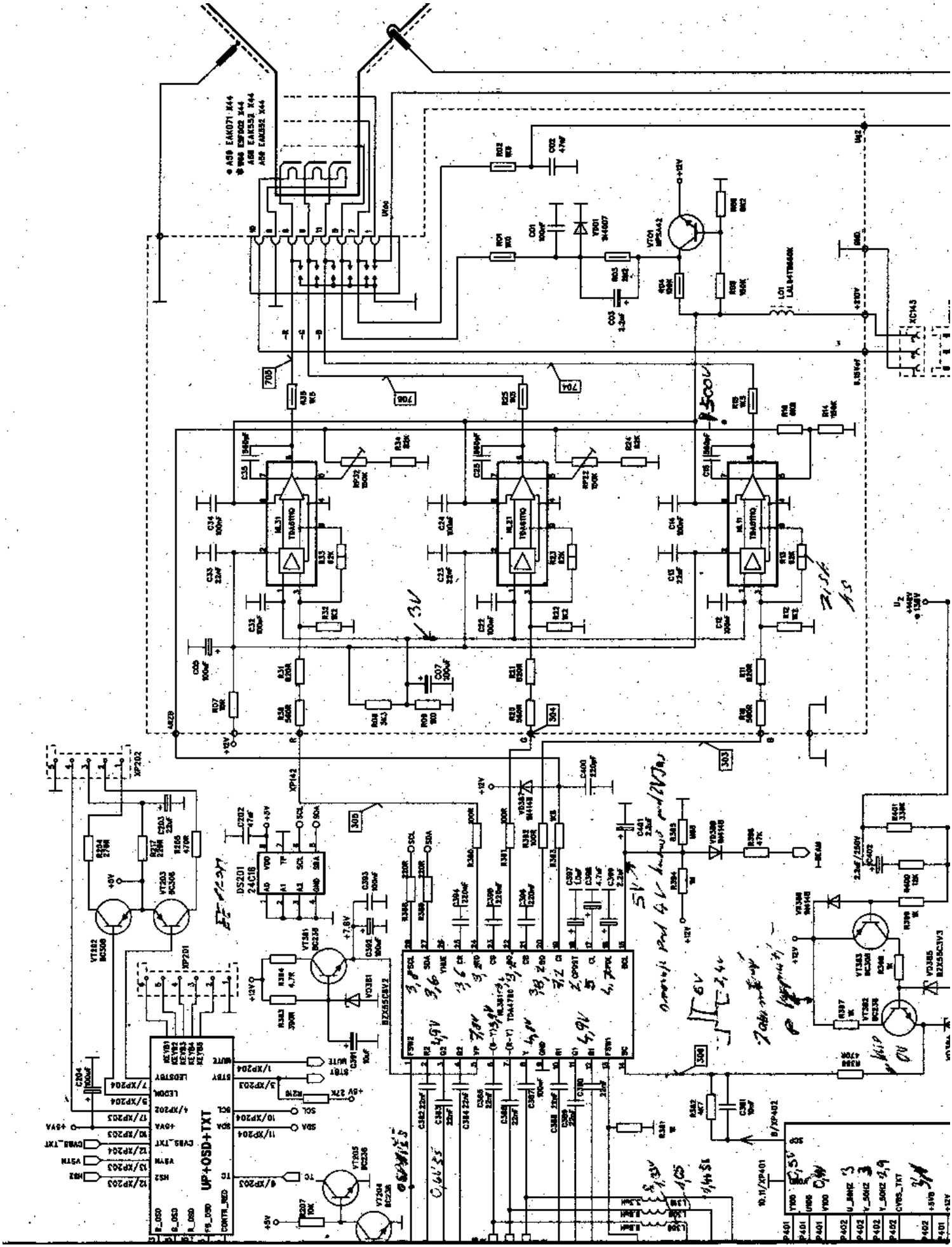

PDF vytvořeno zkušební verzí pdfFactory www.fineprint.cz

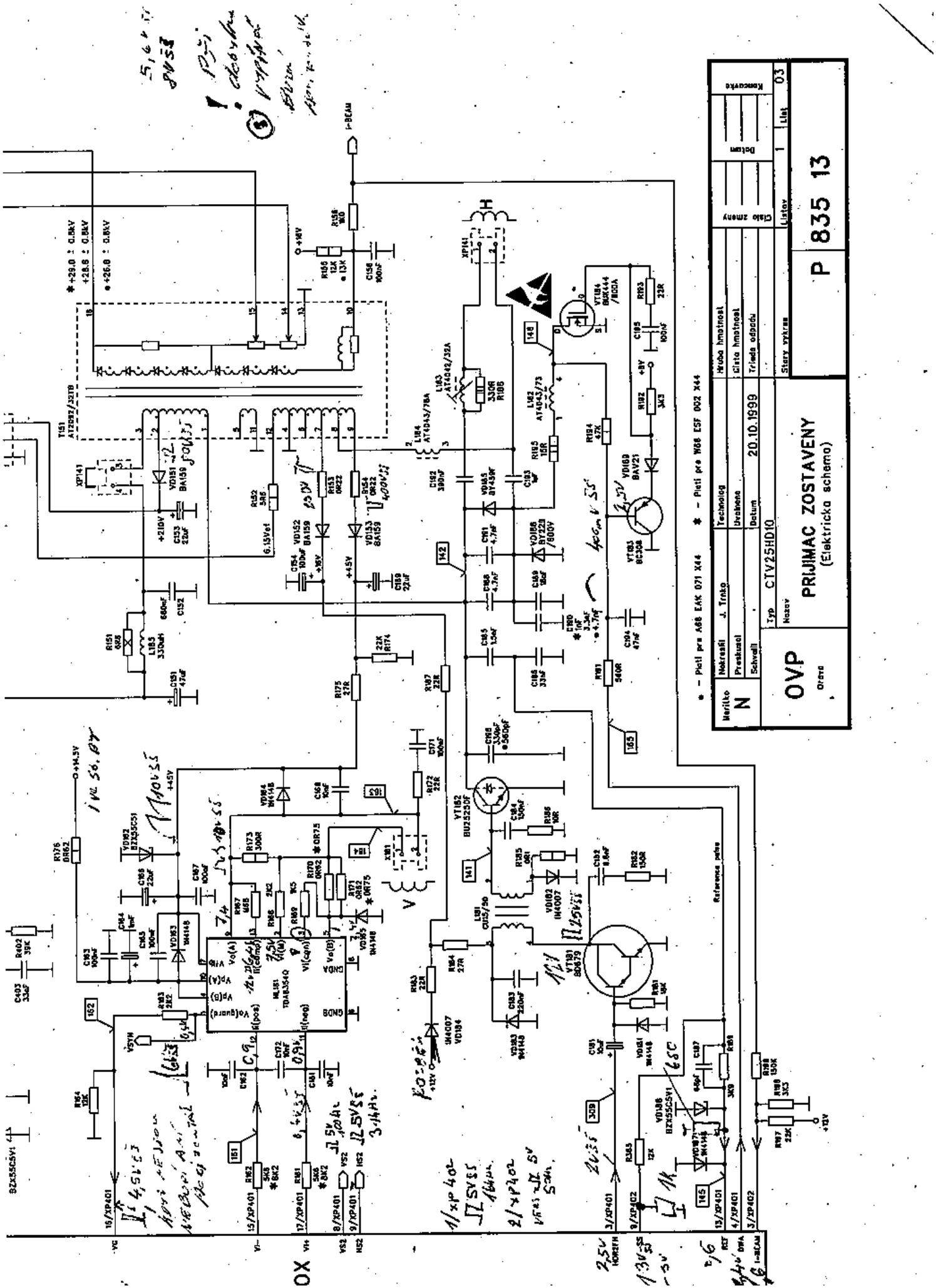

PDF vytvořeno zkušební verzí pdfFactory www.fineprint.cz

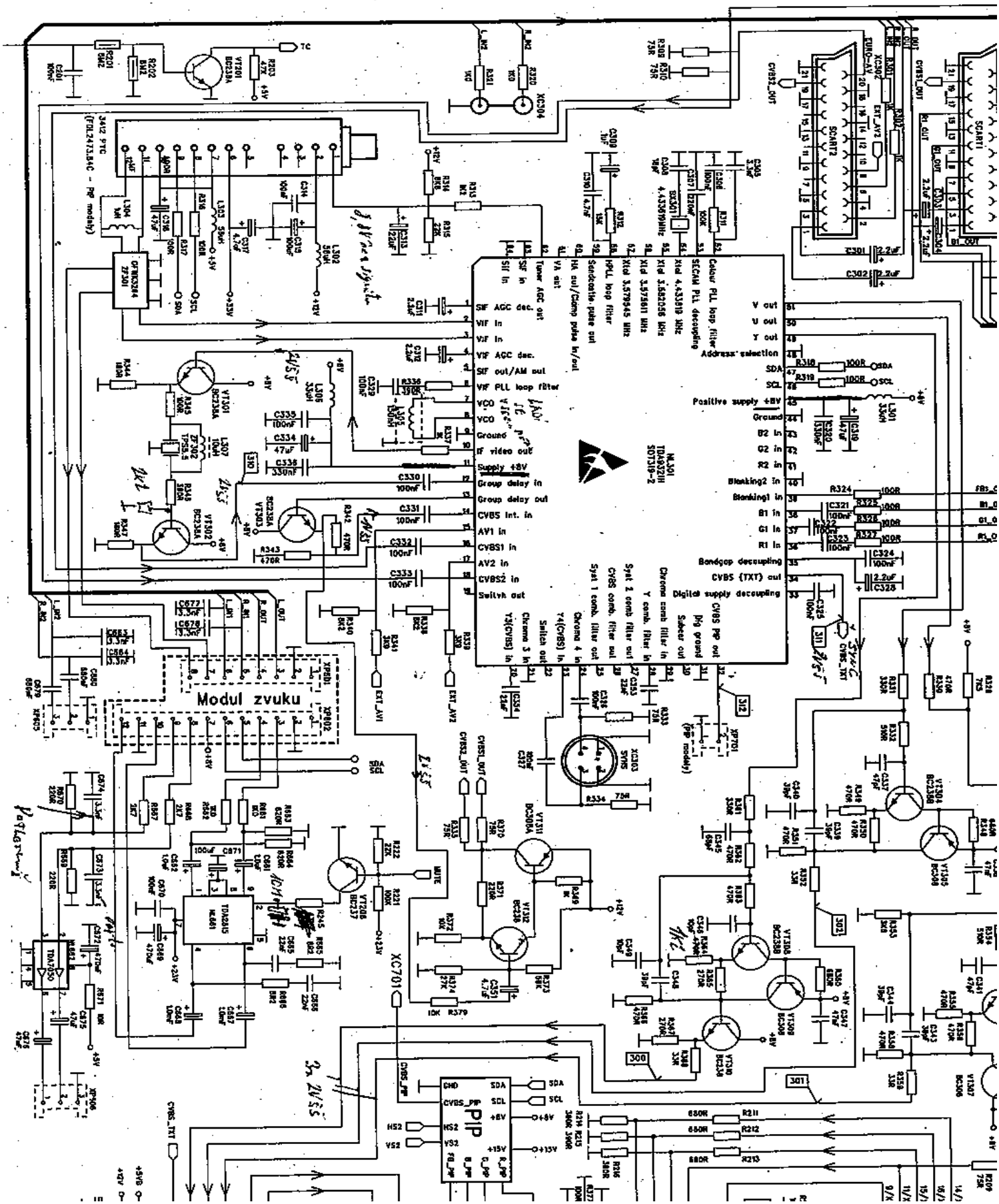
Modul zvuku
PIP
SCART1
SCART2
SIF AGC dec.
VIF in
VIF in
VIF AGC dec.
SIF out/AM out
VIF PLL loop filter
VCO
VCO
Ground
IF video out
Supply +8V
Group delay in
Group delay out
CVBS int. in
AV1 in
CVBS1 in
AV2 in
CVBS2 in
Switch out
Tuner AGC out
SIF in
SIF in
HA out/Comp pulse out
Sandcastle pulse out
HPLL loop filter
Colour PLL loop filter
SECAM PLL decoupling
V out
U out
Y out
Address selection
Positive supply +8V
Ground
B2 in
G2 in
R2 in
Blanking2 in
Blanking1 in
B1 in
G1 in
R1 in
Bandgap decoupling
CVBS (TXT) out
Digital supply decoupling
CVBS PIP out
Pin ground
Subcar out
Chroma comb filter in
Y comb filter in
Syst 2 comb filter out
CVBS comb filter out
Syst 1 comb filter out
Chroma 4 in
Y4(CVBS) in
Switch out
Chroma 3 in
Y3(CVBS) in
TDA4332H
SDT319-2
TDA7050
TDA2615
M.481
CPM3284
ZF301
TC
MUTE
CVBS_OUT
CVBS_TXT
CVBS_PIP
EXT_AV1
EXT_AV2
SDA
SCL
HS2
VS2
+8V
+15V
+12V
+5V
+35V
+24V
+42V
+5VS
XC701
XC304
XC302
XC303
XP701
XP506
XP801
XP802
XP901
XP902
XP903
XP904
XP905
XP906
XP907
XP908
XP909
XP910
XP911
XP912
XP913
XP914
XP915
XP916
XP917
XP918
XP919
XP920
XP921
XP922
XP923
XP924
XP925
XP926
XP927
XP928
XP929
XP930
XP931
XP932
XP933
XP934
XP935
XP936
XP937
XP938
XP939
XP940

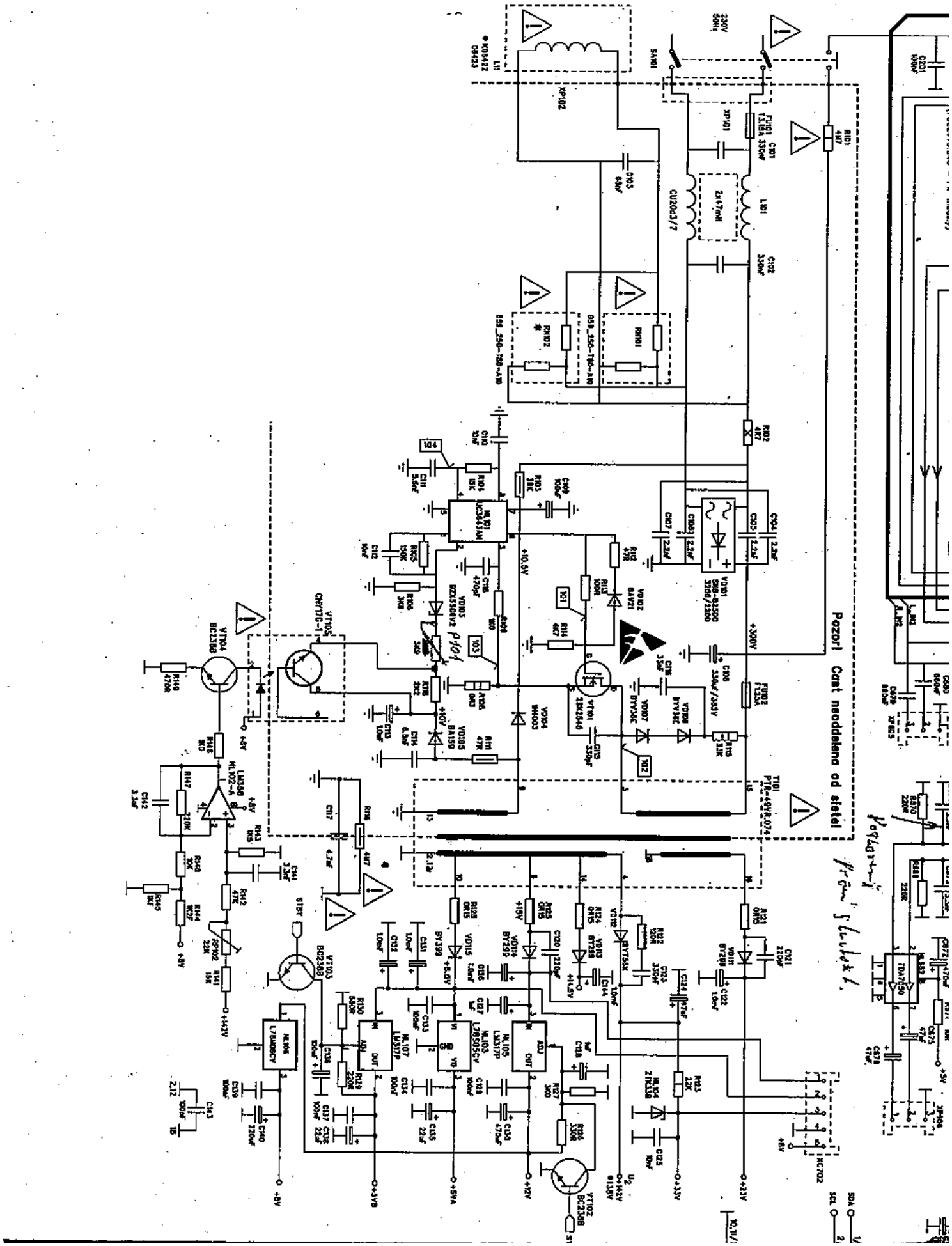

PDF vytvořeno zkušební verzí pdfFactory www.fineprint.cz